ART. BOX5540L

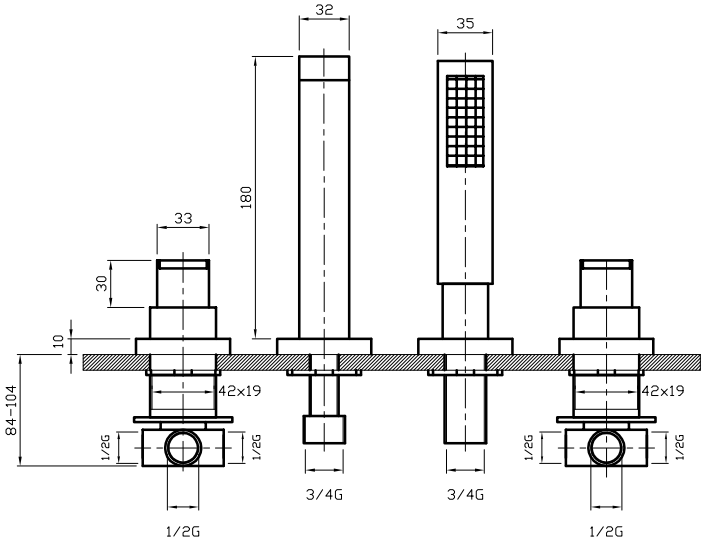

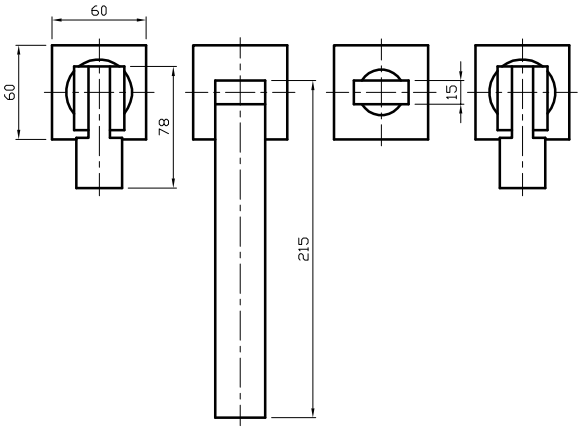

© Copyright Neve Rubinetterie s.r.l.